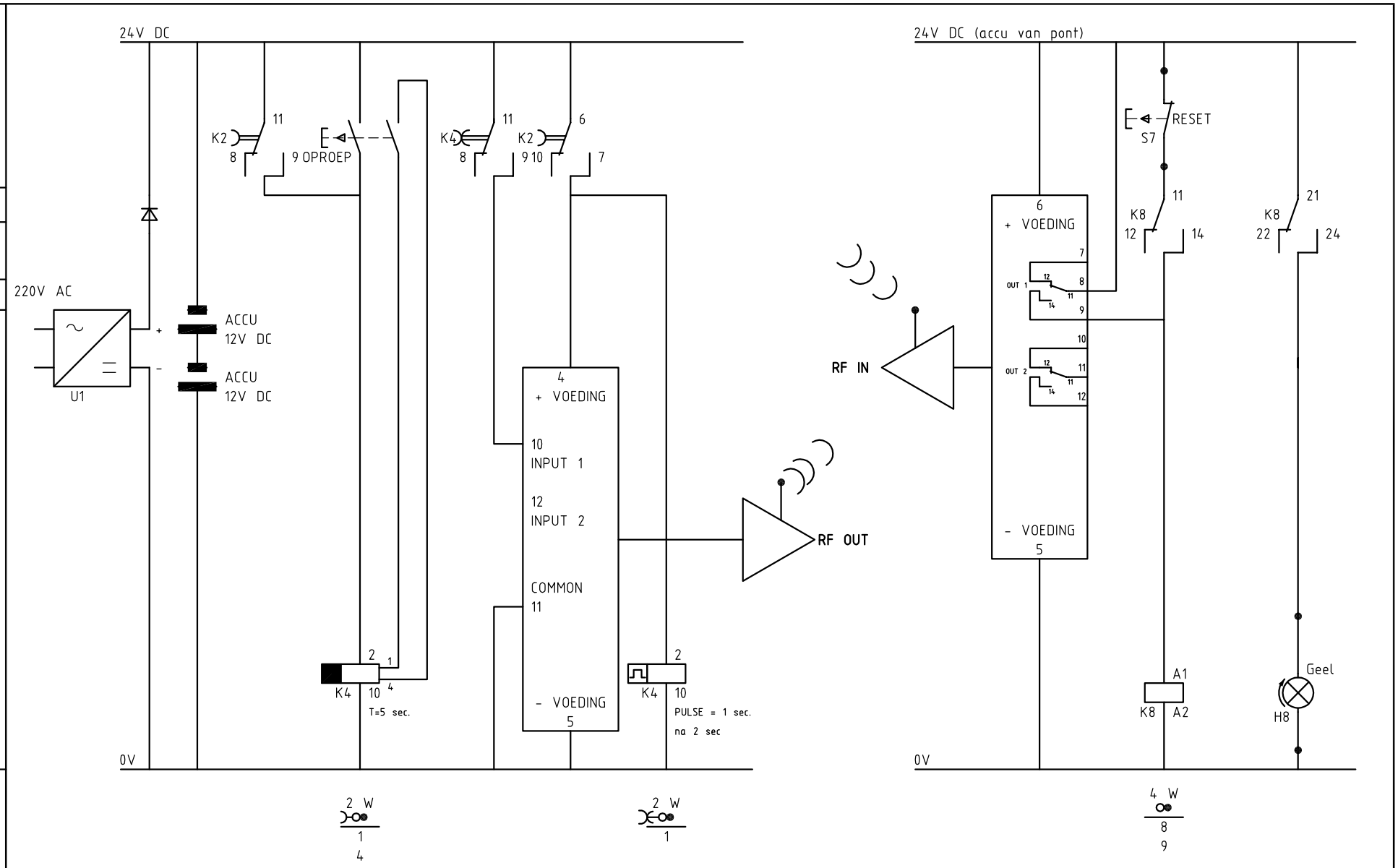

ZENDER	ONTVANGER
FABR. : PHOENIX	FABR. : PHOENIX
TYPE : RAD-ISM-2400	TYPE : RAD-ISM-2400

0	1	2	3	4	5	6	7	8	9

MODIFICATION	BY	DATE	ISSUE
FIRST ISSUE			A

SITE : VRIENDEN VAN VOETVEREN
DEPARTMENT : CRUCIUS
DESCRIPTION : OPROEP ZUIDSCHALKWIJKERWEG THEEHUIS
ADMIN. ORIG. : AutoCAD 2005
MADE BY : JG
DRAWN BY :
ADMIN. CODE :
DERIVED FROM :
SCALE :

SIZE: A3
SITE CODE:
DRAWING NO.:
ISSUE: A
SHEET: 001

FILE=OPROEP PONTJE_2.dwg DATE: 05-03-2007 07:44 By graafj01